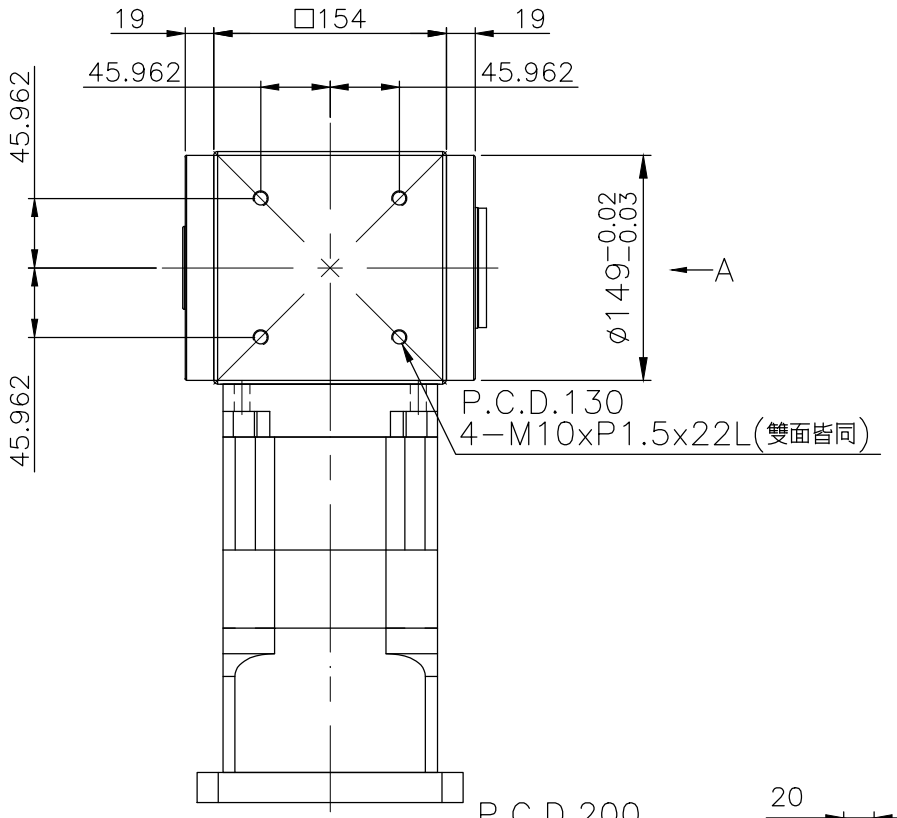

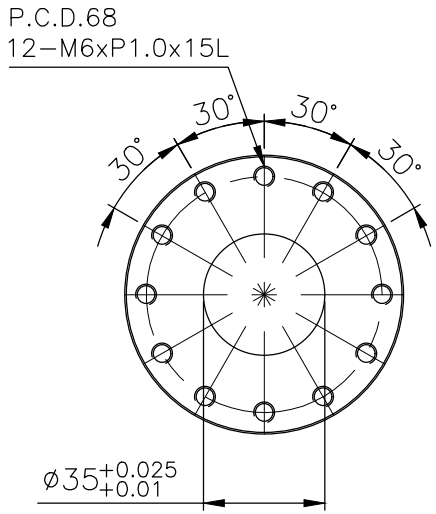

A VIEW

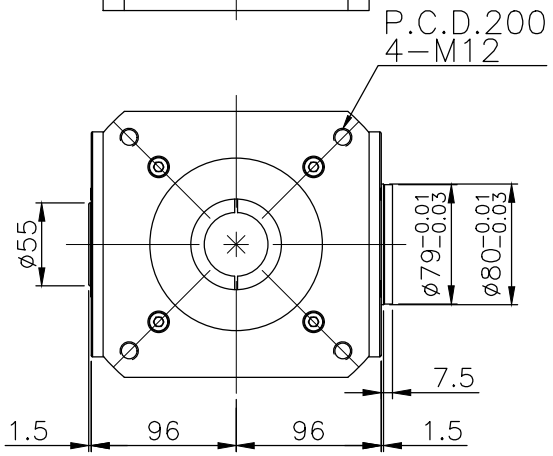

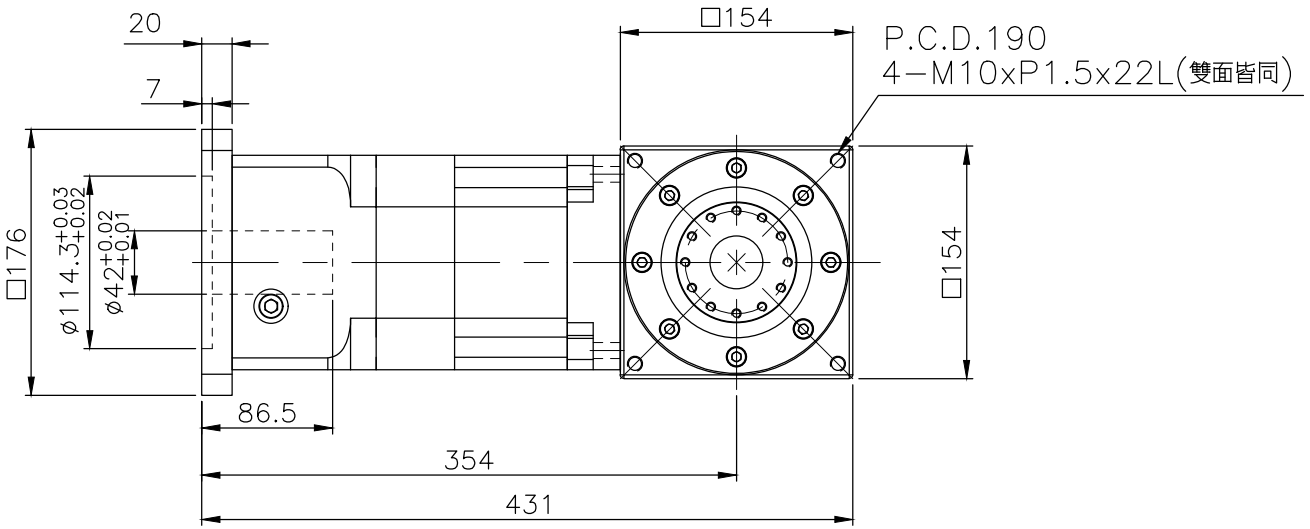

Material			DWG.NO. 2019	REV.NO. 2019
Treatment			PRT.NO. RAM150-L2-XX-F-42-114.3-200-M12	Drawing Aaron
Hardness			Scale 連接攔	Check