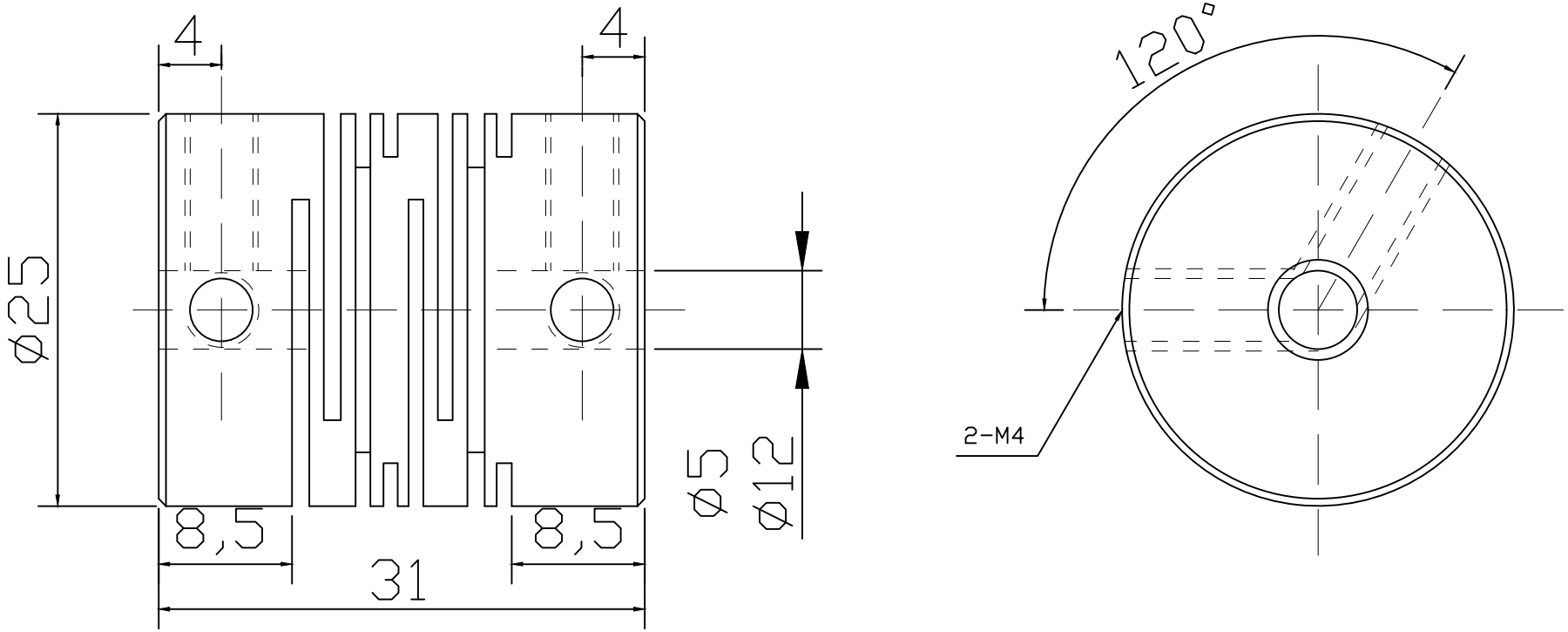

DWG NO. (PART NO.)

SFCS-25-5-12