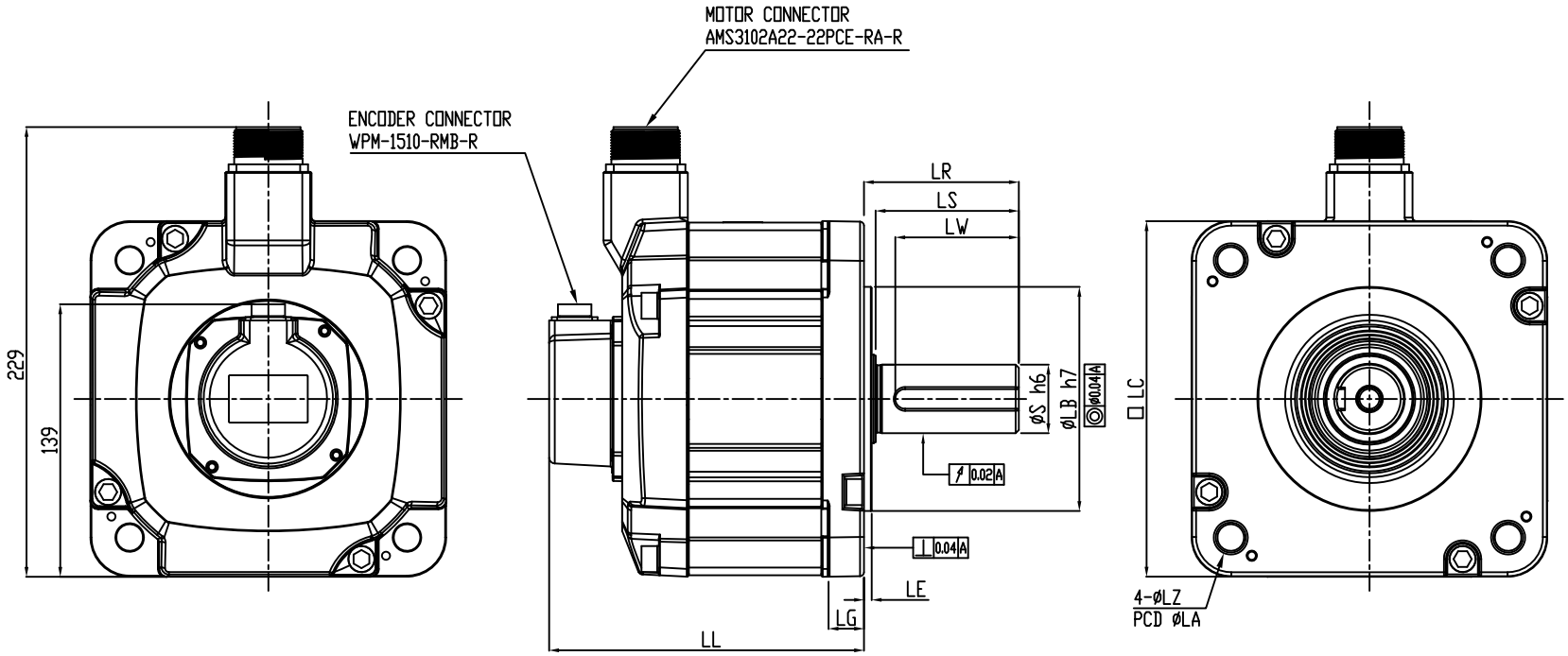

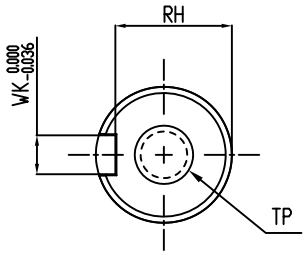

SHAFT END DETAILS

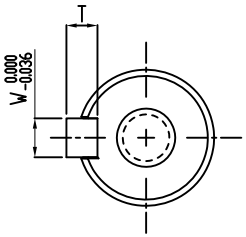

KEY DETAILS

MODEL	LL	LC	LE	LG	LB	LZ	LA	LR	LS	S	LW	WK	W	T	RH	TP
ECM-B3M-F□1830RS1	160.5	180	4	18	114.3	13.5	200	79	73	35	63	10	10	8	30	M12, Depth 25
ECM-B3M-E□1830RS1	149.5	180	4	18	114.3	13.5	200	79	73	35	63	10	10	8	30	M12, Depth 25
ECM-B3M-E□1820RS1	137.5	180	4	18	114.3	13.5	200	79	73	35	63	10	10	8	30	M12, Depth 25

REV.	ECN NO.

台達電子工業股份有限公司
DELTA ELECTRONICS, INC.

DRAWN: | DESIGN:
APPROVE: | DATE: 06/04/2019

THESE DRAWINGS AND SPECIFICATIONS ARE THE PROPERTY OF DELTA ELECTRONICS, INC. AND SHALL NOT BE REPRODUCED OR USED AS THE BASIS FOE THE MANUFACTURE OR SELL OF APPARATUSES OR DEVICES WITHOUT PERMISSION.

DIMENSIONAL TOLERANCES

	( )	( )	( )	( )	ANGLES
DECIMALS	<50 ±0.1	<50 ±0.15	<50 ±0.2	<30' ±0.1°	
X ±0.3	>50'100±0.15	>50'100±0.2	>50'100±0.25	>30"60'±0.3°	
X.X ±0.2	>100'200±0.2	>100'200±0.25	>100'200±0.3	>60"90'±0.5°	
X.XX±0.1	>200' ±0.2%	>200' ±0.25%	>200' ±0.3%		

DESCRIPTION: CONFIDENTIAL
ECM-B3M-F180

A3 SIZE | THIRD ANGLE PROJECTION | PART NO.: | REV. 00

USED ON | UNIT MM | SCALE | SHEET 1 OF1

FRAME NAME: DF-MEA3H-3R02.DWG