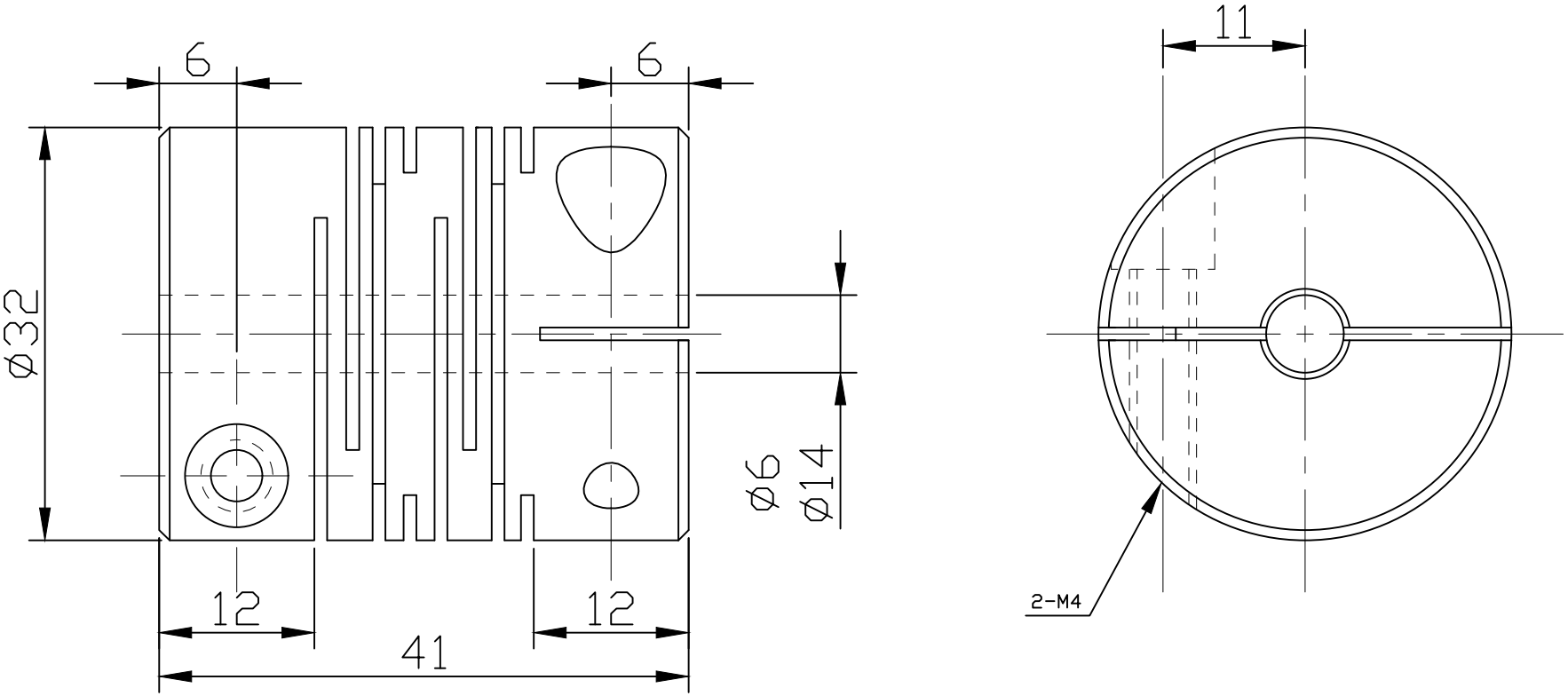

DWG NO. (PART NO.)

SFCS-32C-6-14