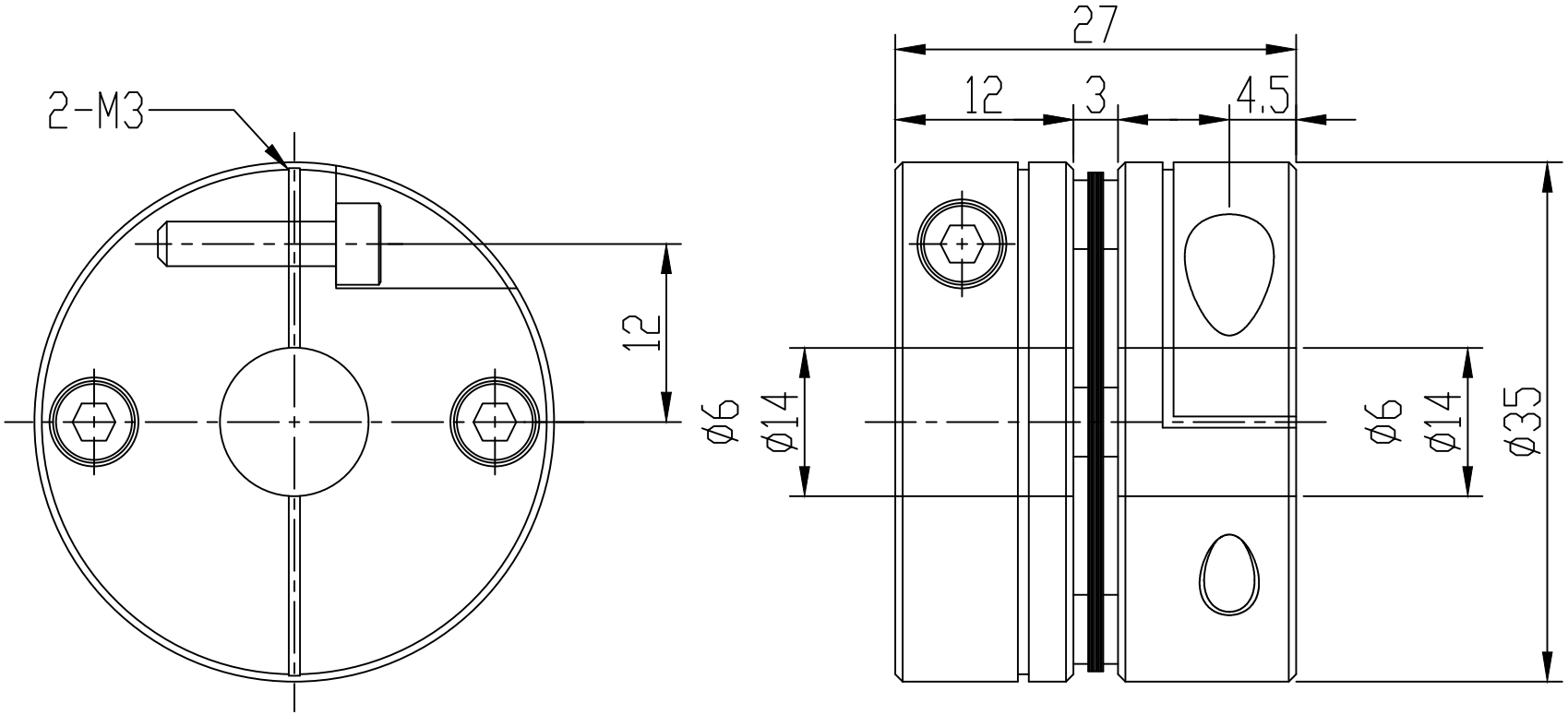

DWG NO. (PART NO.)

SHS35C