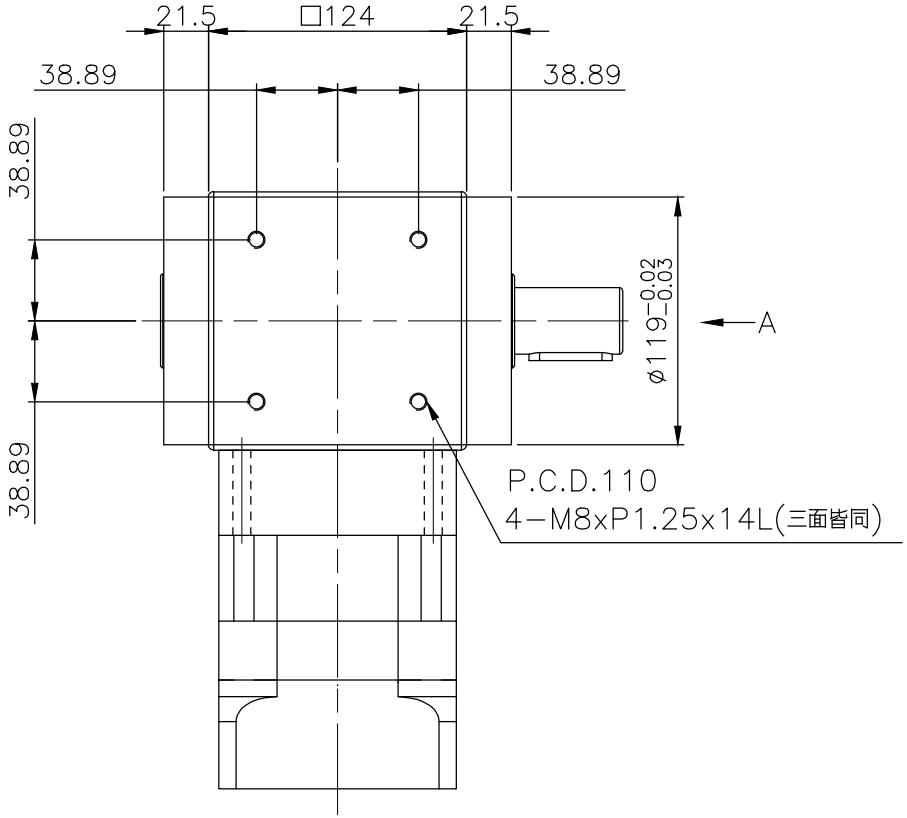

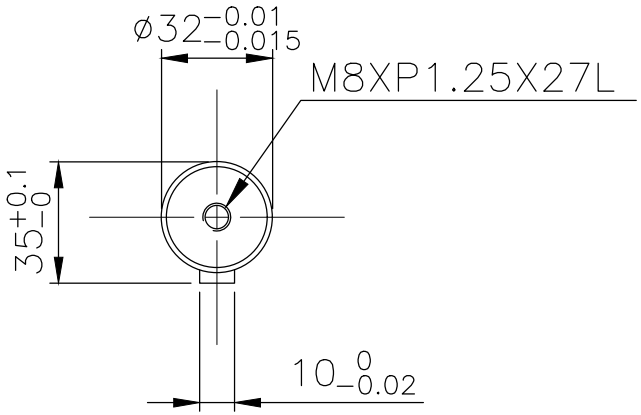

A VIEW

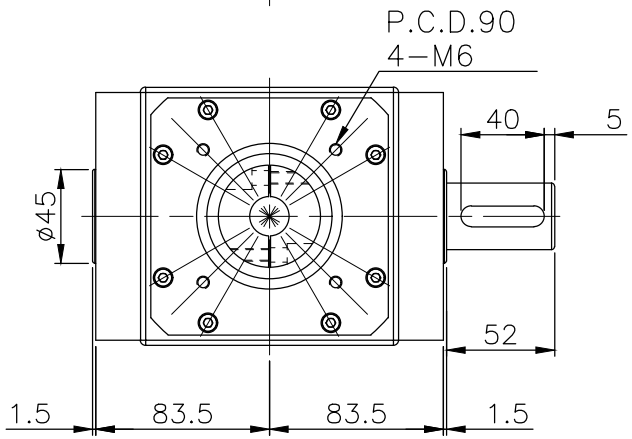

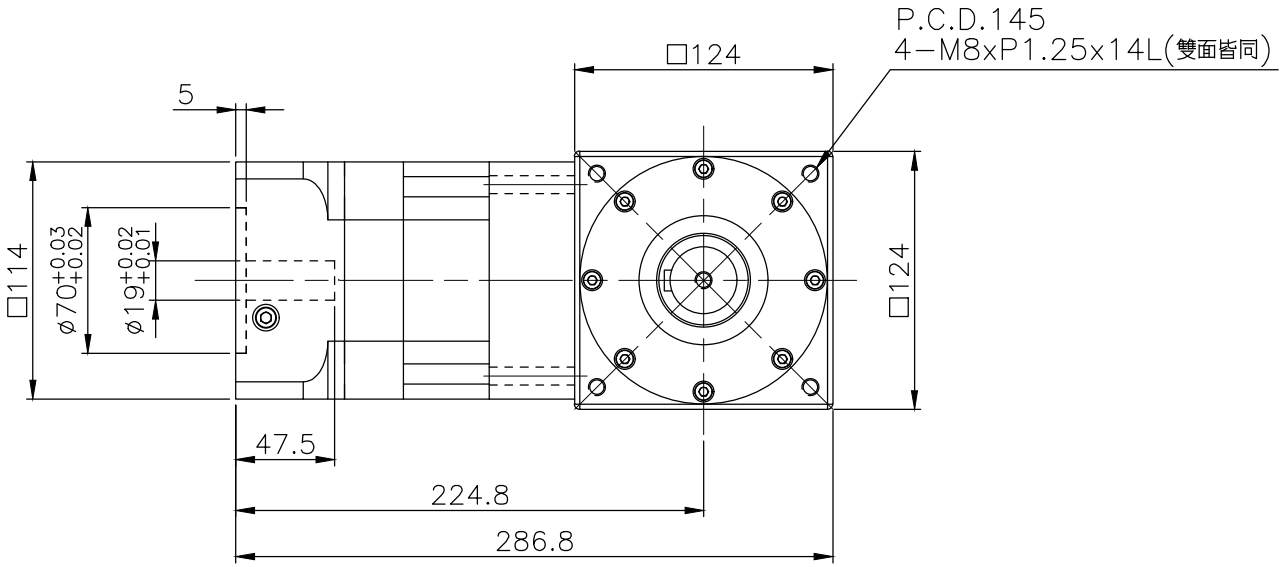

Material			DWG.NO. 2019	REV.NO. 2019
Treatment			PRT.NO. RAM120-L2-XX-S-19-70-90-M6	Drawing Aaron
Hardness			Scale	Check