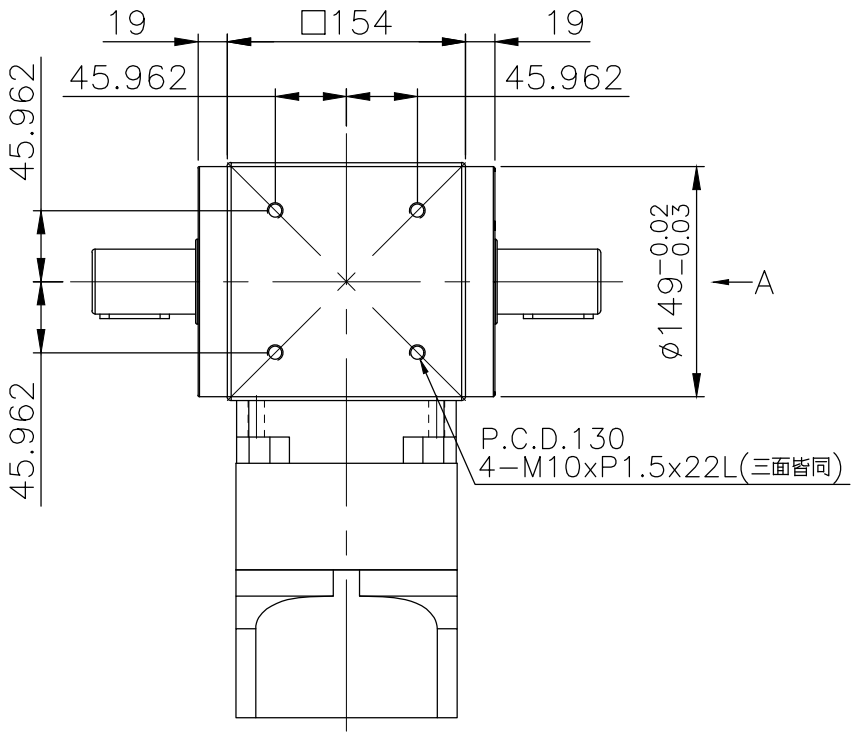

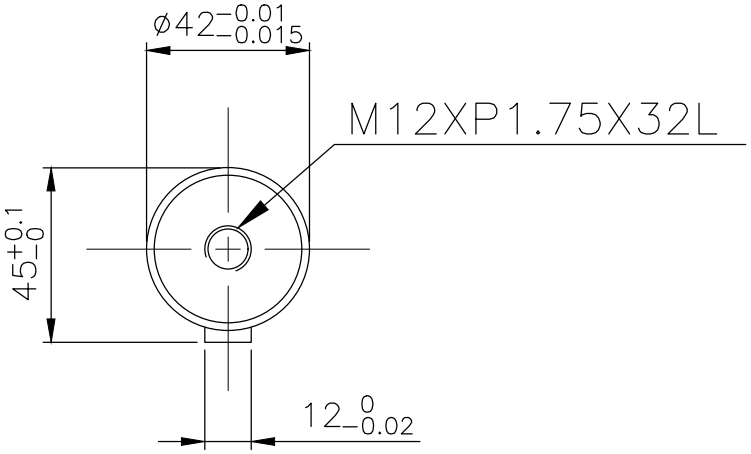

A VIEW

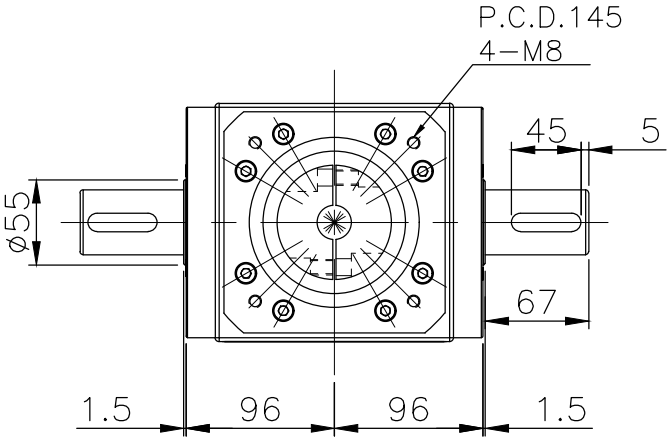

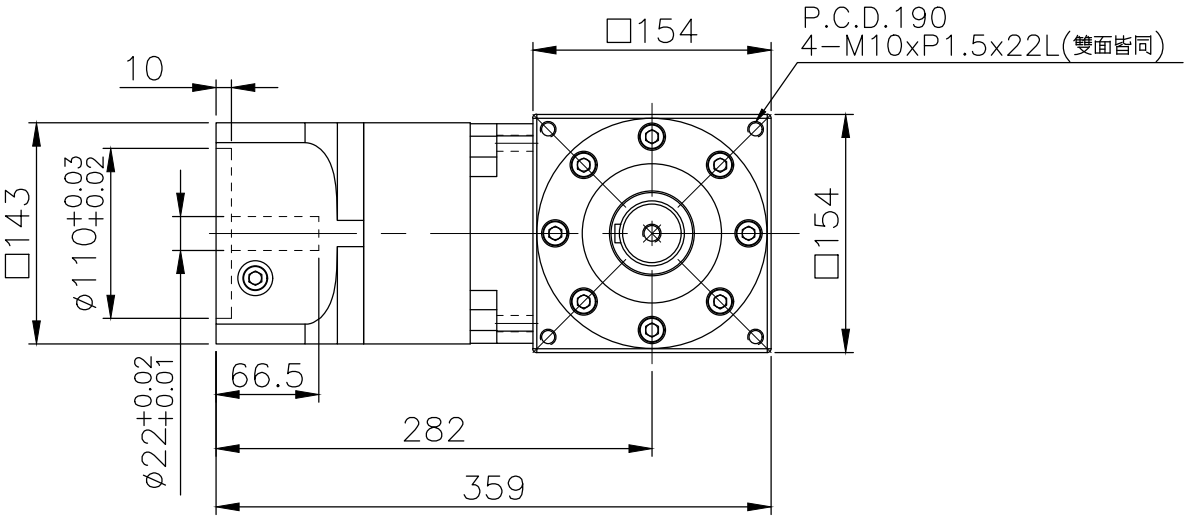

Material			DWG.NO. 2019	REV.NO. 2019
Treatment			PRT.NO. RAH150-L1-XX-2S-22-110-145-M8	Drawing Aaron
Hardness			Scale	Check