Backlash[arcmin]				
	L1		L2	
P	P0≦1		P0≦3	
	P1≦3		P1≦5	
	P2≦5		P2≦7	

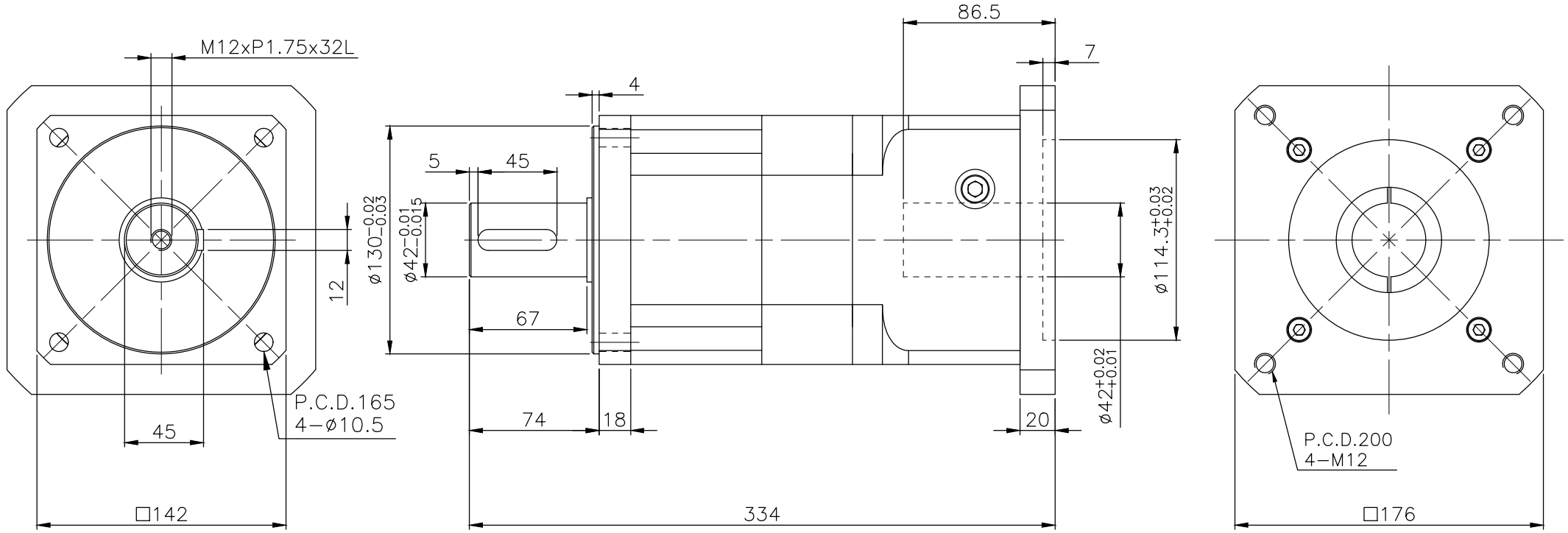

Material			DWG.NO. 2019	REV.NO. 2019
Treatment			PRT.NO. DA150-PX-L2-XX-42-114.3-200-M12	Drawing Aaron
Hardness			Scale 連接欄	Check